Greg Alderson Associates

BYRON SHIRE COUNCIL
Development Application
APPROVED PLAN
DA No. 10.2022.371.1
Date: 16 October 2023

REF: 22381- RESPONSE TO COUNCIL RFI
YOUR REF:

4/10/2023

The General Manager
Byron Shire Council
PO Box 219
MULLUMBIMBY, NSW 2482

**Re: Council RFI Letter for DA No. 10.2022.371.1 dated 23 December 2022**

This office has been engaged by Mr Chris Vitale to address the Item 3 of Council RFI letter dated 23 December 2022 for the proposed residential flat building development comprising of twenty-six (26) dwellings for Development Application No. 10.2022.371.1 for land parcels on Lot 1 on DP 582819, Lots 8 & 9 on Section 52, DP 758207, Lot 7, 8 & 9 on DP 841611, Lots 11 & 12 on DP 1138310 and Lot 1 on DP 780935.

This letter will address the following as requested by Council under the item 3 of the RFI letter:

- Internal Access and Manoeuvring

## 1.1 Internal Access and Manoeuvring RFI

Item 3 Internal access and Manoeuvring of the RFI stated that *"Waste collection and basement ramp; the proposed ramp grade of 1:4.2 exceeds the maximum grade of 1:6.5 and maximum rate of change of grade in AS2890 to cater for the design vehicle greater than B99 (SUV & Other 4 x 4 Vehicles). The height of a mini rear lift private waste collection vehicle is 4.3m. However the available Floor to ceiling height (headroom) is 3.2m. There is therefore insufficient headroom in the circulation road way in the basement to accommodate a mini rear lift waste collection truck. Further, the proposed waste collection vehicle is a non-standard vehicle. The turning circles applied in the manoeuvring analysis needs to be verified. The adopted wall to wall turning circle, based on the collection vehicle dimensions is smaller than the turning radius of a B85 vehicle (e.g. Mazda 2) and the proposed design entry movement utilises the indented parking bays in Milton St. Overall a manoeuvring analysis cannot be verified using the information currently provided in the DA.*

## 1.2 GAA Comments on Internal Access and Manoeuvring

The waste collection vehicle to service the development is a non-standard waste collection vehicle supplied by Richmond Waste. The overall dimension of the waste collection has provided by the supplier and is attached to this letter and it can be seen in the Appendix J of GAA traffic impact statement report titled "22381-TIS-E.
A letter of confirmation of the vehicle dimension from the supplier is also attached to this letter.
The height of the mini rear private waste vehicle is 2.85m. The headroom (floor to ceiling height) is 3.2m. There is sufficient headroom for the private waste vehicle in the circulation roadway in the basement.
The waste collection vehicle was modelled using AutoTURN software based on the dimensions provided by the supplier. The turning circles for the custom waste collection vehicle is attached to the letter. The turning radius is bigger than a B85 as can be seen in the attached. It is also noted that a B85 is described by AS2890 as a Ford Falcon sedan, which is significantly larger than a Mazda 2 vehicle.
A B85 and B99 vehicle vertical template was also checked on the proposed ramp grade, no vehicle bottoming on the grade.
The vertical and horizontal clearance of the custom waste collection vehicle was checked for the access driveway and underground parking circulation clearance. The custom waste vehicle did not clash with any

structure. The result of the analysis is contained in Appendix J of GAA traffic impact statement report titled "22381-TIS-E" and also attached to this letter.

## 2.0 Conclusion

The non-standard vehicle waste collection vehicle is 2.85m high. The available headroom (floor to ceiling height) is 3.2m. There is sufficient headroom for the waste vehicle in the circulation roadway in the basement. The turning circle for the non-standard waste collection vehicle has been analysed and the turning radius is greater than a 6.5m turning radius of a B85 vehicle has specified in AS2890. 1.

The vertical and horizontal clearance for the waste collection was check using AutoTURN software. The results reveal the waste collecting vehicle will use the access ramp and circulation roadway without clashing with any structures. The B85 vehicle vertical template shows no bottoming on the proposed ramp.
The ramp will be accessible by passenger cars and MRV fire truck without bottoming and there is adequate clearance.

Kind Regards

Sodiq Azeez

**Attachments**

- **Waste Collection Vehicle Dimension Confirmation Letter**
- **Waste Vehicle Dimension**
- **Turning Circle of the Waste Collecting Vehicle**
- **Turning Circle of the Waste Collection Vehicle compared to a B85 Vehicle**
- **Circulation of the Waste Vehicle in the underground parking**
- **Vertical template of the Waste Collection Vehicle**
- **Vertical template of B85 and B99 Vehicle**
-

BYRON SHIRE COUNCIL
Development Application
APPROVED PLAN
DA No. 10.2022.371.1
Date: 16 October 2023

## Allison Reiser

**From:** Tony Martin <tony.martin@solo.com.au>
**Sent:** Thursday, 2 March 2023 9:39 AM
**To:** 'Allison Reiser '
**Subject:** RE: Waste Servicing for proposed development in Shirley St, Byron Bay

Hi Allison

BYRON SHIRE COUNCIL
Development Application
APPROVED PLAN
DA No. 10.2022.371.1
Date: 16 October 2023

Yes, we will be able to service the proposed development at 29 Shirley St & 2-4 Milton Ave, Byron Bay.
with a mini Rearloader vehicle, via 1100ltr bins,

There is not only this proposed development, but several others that will also require a mini rear loader to service

If you have any questions, please do not hesitate to contact me

Regards

RICHMOND RW WASTE

**Tony Martin** | Sales Representative

tony.martin@solo.com.au | www.richmondwaste.com.au | 02 6621 7431
15 Skyline Road Lismore NSW 2480
LIKE US ON facebook 100% Locally Owned and Operated

Please consider the environment before printing this e-mail

**From:** Allison Reiser [mailto:areiser@mraenvironmental.com.au]
**Sent:** Wednesday, 1 March 2023 7:45 PM
**To:** Tony Martin
**Subject:** Waste Servicing for proposed development in Shirley St, Byron Bay

CAUTION: This email originated from outside of SOLO. Do not click links or open attachments unless you recognise the sender and know the content is safe.

Hi Tony,

Thank you for previously providing the vehicle specification for the mini rear lift waste collection vehicle proposed for the development located in 29 Shirley St & 2-4 Milton Ave, Byron Bay.

Council is seeking confirmation in writing (return email is suitable) that a waste collection truck with the dimensions shown in the attached vehicle specification sheet is in your fleet and is available to operate in Byron Bay to provide waste services to this development.

The waste services required include:

- 2 x 1100L general waste bulk bins collected one (1) time per week; and
- 2 x 1100L recycling bulk bin collected one (1) time per fortnight.

If you are able to respond this week would be appreciated and if you require any additional information, please feel free to give me a call or email.

Thanks for your assistance.

Regards, Allison.

**ALLISON REISER** B.App. Sc. (Env Health), Lead Env Auditor

Director & Senior Environmental Consultant

MRA ENVIRONMENTAL™ | YOUR TRUSTED ENVIRONMENTAL PARTNER 25

T:07 5578 7040 P:PO BOX 480, Robina Q 4226 W:mraenvironmental.com.au

This email and any files transmitted with it are intended solely for the use of the addressee(s) and may contain information that is confidential or subject to legal privilege. If you receive this email and you are not the addressee (or responsible for delivery of the email to the addressee), please note that any copying, distribution or use of this email is prohibited and as such, please disregard the contents of the email, delete the email and notify the sender immediately. Mark Rigby & Associates advise that this email and any attached files should be scanned to detect viruses and accepts no liability for loss or damage (whether caused by negligence or not) resulting from the use of any attached files.

**Please consider the environment before printing this e-mail**

BYRON SHIRE COUNCIL
Development Application
APPROVED PLAN
DA No. 10.2022.371.1
Date: 16 October 2023

SD 09/2014

# SALES DATA SHEET

ACN 004 992 090

**BUCHER municipal**

| PRODUCT NAME | DATE | REVISION | SHEET | |
|---|---|---|---|---|
| JS REARLOADER | 02/06/2020 | 01 | 1 OF 1 | SD-JS14EJTA-V259 |

| PRODUCT CODE | PRODUCT SIZE/CAPACITY | SALES MARKET | PRODUCT FUNCTION VARIATION |
|---|---|---|---|
| REARLOADER | 14m | AUSTRALIA | |

BODY OPTIONS

| VEHICLE MAKE | VEHICLE MODEL | AXLE CONFIGURATION | WHEELBASE |
|---|---|---|---|
| IVECO | ML160 E25 | 4x2 | 4455 (STD) |

| CAB/CHASSIS OPTIONS | VCS CODE |
|---|---|
| AIRBAG SUSP. AUTO TRANS. | 2/F4DT1136 |

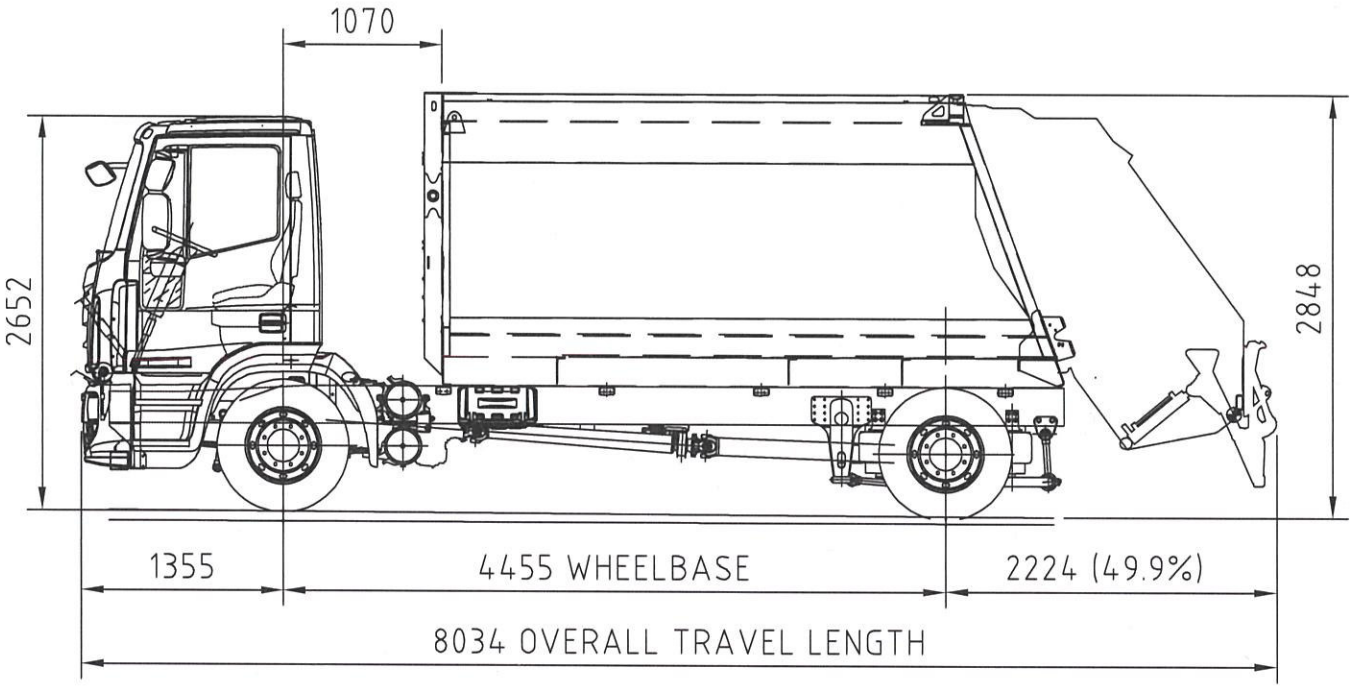


| | FRONT (kg) | REAR (kg) | TOTAL (kg) |
|---|---|---|---|
| TRUCK * | 3,020 | 1,800 | 4,820 |
| JS14 - ECOPACK BODY | 561 | 3,089 | 3,650 |
| DRIVER | 80 | 0 | 80 |
| ADD'L 175L FUEL | 98 | 58 | 156 |
| UNDERBODY BINLIFTER | -125 | 375 | 250 |
| TARE | 3,634 | 5,322 | 8,956 |
| PAYLOAD ** | 848 | 3,678 | **4,527** |
| GROSS | 4,482 | 9,000 | 13,482 |
| MAX RATED LOAD *** | 5,800 | 9,000 | 15,000 |

* TRUCK TARE ESTIMATED FROM TRUCK SPEC SHEETS
** PAYLOAD WEIGHTS ESTIMATED ONLY AND MAY DIFFER
*** PAYLOAD LIMITED BY REAR LEGAL LIMIT

BYRON SHIRE COUNCIL
Development Application
APPROVED PLAN
DA No. 10.2022.371.1
Date: 16 October 2023

Due to continuous product development Bucher Municipal reserves the right to alter specifications without prior notice

# EUROCARGO E6

**ML160E25S**
**ML160E25/P**
**4x2 RIGID**

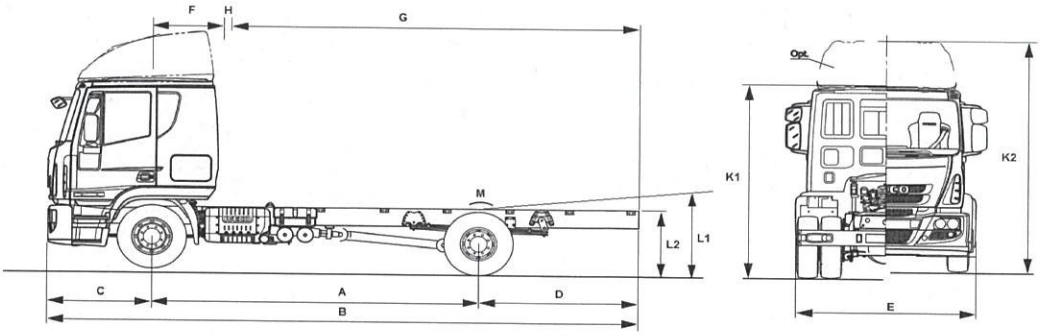


| Plated/Design Weight | GVW (Kg) | GTW (Kg) | Front (Kg) | Rear (Kg) |
|---|---|---|---|---|
| Plated Weight | 15990 | 19490 | 5800 | 10900 |
| Design Weight | 15990 | 19490* | 6100 | 11000 |

* A GTW of 32500kgs is permissible provided a 9 or 12 speed gearbox and the drawbar pack are specified
For Front (Kg) axle capacity upgrade – see Order Guide

**Kerb Weight**

Weights are for the S model to a standard specification and include water, oils, 5 litres of AdBlue and 20 litres of fuel but exclude driver.
Kerb weights are subject to a manufacturing tolerance of +/ -5%.
For /P model add 155kg to the Rear (Kg) axle kerb weight.
A sleeper cab standard roof adds 100kg (70/30kg) to the kerb weight. A high roof sleeper adds 160kg (120/40kg) to the kerb weight.

| Wheelbase (mm) | **3105** | **3690** | **4185** | **4455** | **4815** | **5175** | **5670** | **6570** |
|---|---|---|---|---|---|---|---|---|
| Front (Kg) | 3092 | 3112 | 3137 | 3147 | 3182 | 3192 | 3227 | 3262 |
| Rear (Kg) | 1418 | 1498 | 1503 | 1508 | 1543 | 1553 | 1638 | 1693 |
| Total (Kg) | 4510 | 4610 | 4640 | 4655 | 4725 | 4745 | 4865 | 4955 |
| Maximum Body/Payload (Kg) @ GVW | 11480 | 11380 | 11350 | 11335 | 11265 | 11245 | 11125 | 11035 |

**Dimensions (mm)**

| | | | | | | | | | | |
|---|---|---|---|---|---|---|---|---|---|---|
| A | Wheelbase | | 3105 | 3690 | 4185 | 4455 | 4815 | 5175 | 5670 | 6570 |
| B | Overall length (over bumpers) | | 5690 | 6702 | 7512 | 7917 | 8547 | 9132 | 9942 | 11447 |
| C | Front overhang | | 1362 | 1362 | 1362 | 1362 | 1362 | 1362 | 1362 | 1362 |
| D | Rear overhang | | 1313 | 1740 | 2055 | 2190 | 2460 | 2685 | 3000 | 2735 |
| E | Cab width (over wings) | | 2420 | 2420 | 2420 | 2420 | 2420 | 2420 | 2420 | 2420 |
| F | C/line f/axle to back of cabequip | day | 385 | 385 | 385 | 385 | 385 | 385 | 385 | 385 |
| | | sleeper | | 965 | 965 | 965 | 965 | 965 | 965 | 965 |
| G | Usable frame length | day | 3943 | 4955 | 5765 | 6170 | 6800 | 7385 | 8195 | 9700 |
| | | sleeper | | 4375 | 5185 | 5590 | 6220 | 6805 | 7615 | 9120 |
| H | Cab gap | | 120 | 120 | 120 | 120 | 120 | 120 | 120 | 120 |
| K1 | Cab height (unladen*) | std roof | 2765 | 2765 | 2765 | 2765 | 2765 | 2763 | 2762 | 2761 |
| K2 | | high roof | | 3420 | 3420 | 3420 | 3417 | 3415 | 3415 | 3415 |
| L1 | Frame height at centre line of axle | S | 1041 | 1039 | 1037 | 1038 | 1038 | 1038 | 1036 | 1035 |
| | | /P | 904 | 903 | 903 | 903 | 903 | 903 | 903 | 902 |
| L2 | Frame height at end of frame | S | 1080 | 1084 | 1085 | 1085 | 1086 | 1088 | 1086 | 1087 |
| | | /P | 886 | 886 | 886 | 886 | 886 | 886 | 886 | 886 |
| M | Wheel bump clearance | | 150 | 150 | 150 | 150 | 150 | 150 | 150 | 150 |
| | Turning circle (wall to wall) | | 12340 | 14080 | 15540 | 16340 | 17400 | 18480 | 19940 | 22600 |

* Reduce by 3mm for air suspension models

| Tyres and Wheels | Tyre Size | | Tread | | Wheels (8 stud) | |
|---|---|---|---|---|---|---|
| | Front | Rear | Front | Rear | Front | Rear |
| Standard | 285/70R19.5 | 285/70R19.5 | On Road | Traction | 7.50 x 19.5 | 7.50 x 19.5 |
| Optional | 305/70R19.5 | 305/70R19.5 | On Road | Traction | 8.25 x 19.5 | 8.25 x 19.5 |
| Optional | 11R22.5 | 11R22.5 | On/Off Road | On/Off Road | 7.50 x 22.5 | 7.50 x 22.5 |

BYRON SHIRE COUNCIL
Development Application
APPROVED PLAN
DA No. 10.2022.371.1
Date: 16 October 2023

IVECO

The information in this literature is intended to be of a general nature only. Iveco Ltd reserves the right to modify or change specification at any time. For further information please consult your dealer. PD/AP/AD ML160E25 Truck 19/12/2013

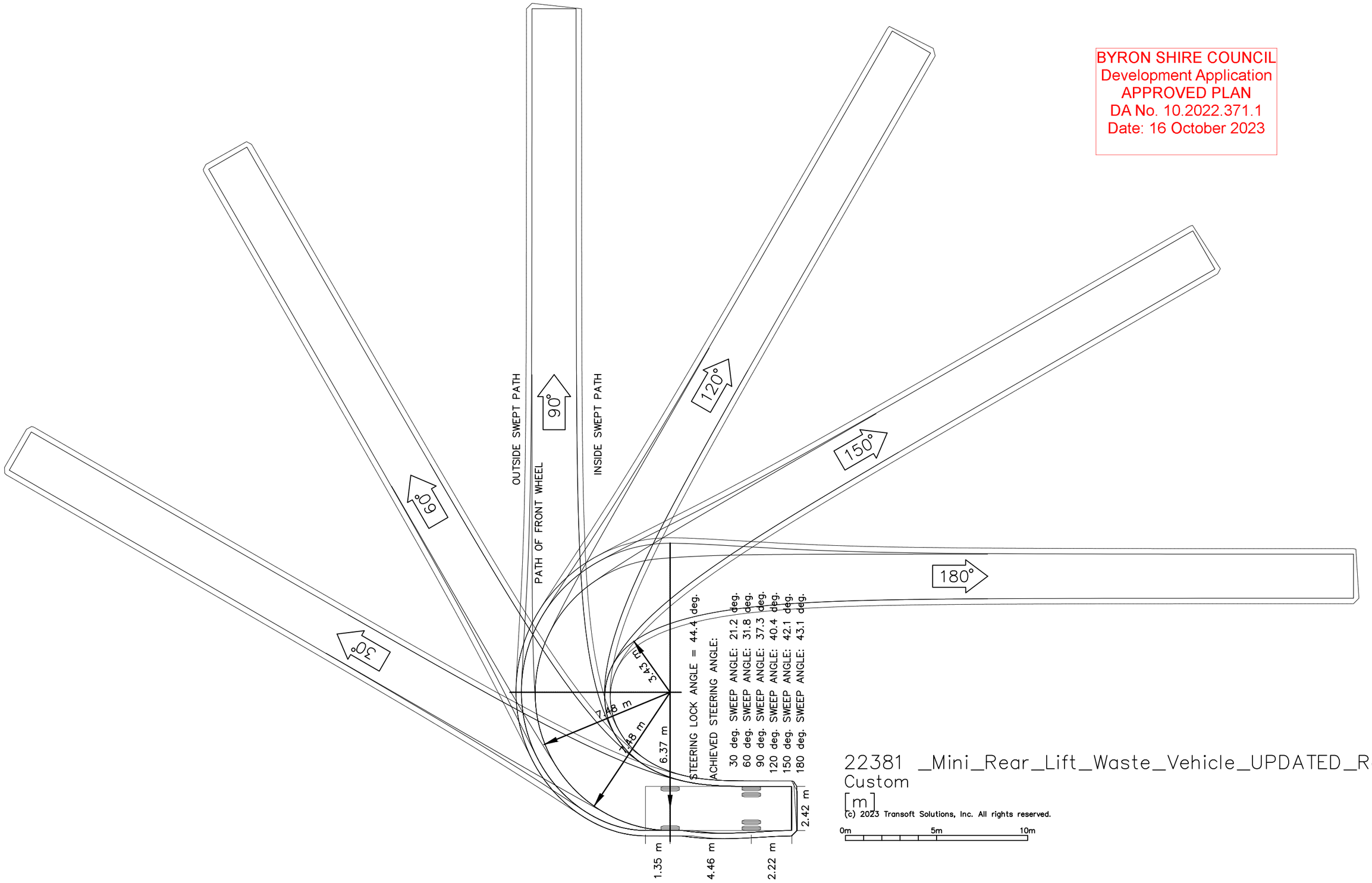


BYRON SHIRE COUNCIL
Development Application
APPROVED PLAN
DA No. 10.2022.371.1
Date: 16 October 2023

| REV | REVISION DESCRIPTION | BY | DATE |
|---|---|---|---|
| A | SWEPT PATH TEMPLATE | AB | 23/02/2023 |

THIS DRAWING IS CONFIDENTIAL AND IS THE PROPERTY OF GREG ALDERSON AND ASSOCIATES. IT MUST NOT BE DISCLOSED TO A THIRD PARTY, REPRODUCED, COPIED, OR LENT WITHOUT THE WRITTEN CONSENT OF THE PROPRIETOR.

DO NOT SCALE DRAWINGS, USE FIGURED DIMENSIONS

REFER COVER SHEET FOR NOTES UNLESS NOTED OTHERWISE

Z:\JOBS\22\22381 - Vitale Property Group - 29 Shirley Street, Byron Bay\CIVIL\CAD\22381-CIV-SP-E - Swept Path Analysis.dwg

**GREG ALDERSON & ASSOCIATES**
ABN 58 594 160 789
43 Main Street CLUNES NSW 2480
Ph: 02 6629 1552
E: office@aldersonassociates.com.au
Web: aldersonassociates.com.au

Client: VITALE PROPERTY GROUP PTY LTD

Site address: 29 SHIRLEY STREET BYRON BAY NSW 2481

Title: MINI REAR LIFT WASTE VEHICLE SWEPT PATH TEMPLATE

Project: 29 SHIRLEY STREET UNIT DEVELOPMENT

FOR INFORMATION

| Drawn: | Scale: | | Checked: | Date: |
|---|---|---|---|---|
| AB | 1:200 | | | 23/02/2023 |
| Checked: AE | Original Size: A3 | No. in set: 03 of 03 | | Revision: A |
| Job Number: 22381 | Drawing Number: 22381-CIV-SP-03 | | | |

BYRON SHIRE COUNCIL
Development Application
APPROVED PLAN
DA No. 10.2022.371.1
Date: 16 October 2023

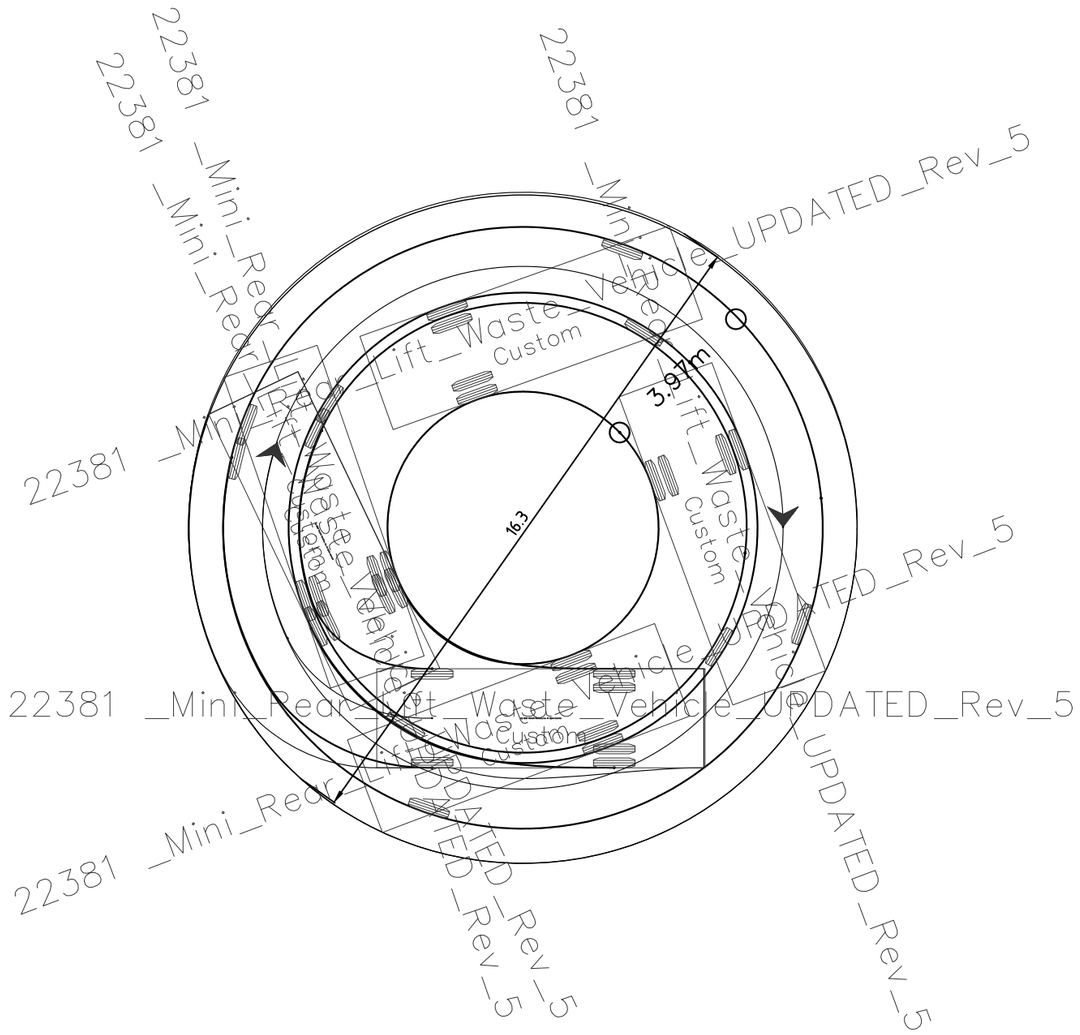


PRIVATE WASTE COLLECTION VEHICLE
TURNING CIRCLE USING AutoTURN

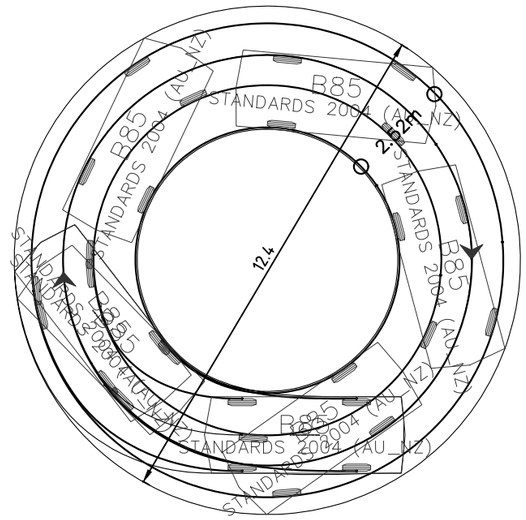


B85 TURNING CIRCLE using AutoTURN

| REV | REVISION DESCRIPTION | BY | DATE |
|---|---|---|---|
| A | SWEPT PATH TEMPLATE | AB | 23/02/2023 |

THIS DRAWING IS CONFIDENTIAL AND IS THE PROPERTY OF GREG ALDERSON AND ASSOCIATES. IT MUST NOT BE DISCLOSED TO A THIRD PARTY, REPRODUCED, COPIED, OR LENT WITHOUT THE WRITTEN CONSENT OF THE PROPRIETOR.

DO NOT SCALE DRAWINGS, USE FIGURED DIMENSIONS

REFER COVER SHEET FOR NOTES UNLESS NOTED OTHERWISE

Z:\JOBS\22\22381 - Vitale Property Group - 29 Shirley Street, Byron Bay\CIVIL\CAD\22381-CIV-SP-F.dwg

**GREG ALDERSON & ASSOCIATES**
ABN 58 594 160 789
43 Main Street CLUNES NSW 2480
Ph: 02 6629 1552
E: office@aldersonassociates.com.au
Web: aldersonassociates.com.au

Client: VITALE PROPERTY GROUP PTY LTD

Site address: 29 SHIRLEY STREET BYRON BAY NSW 2481

Title: PRIVATE WASTE VEHICLE AND B85 TURNING CIRCLE

Project: 29 SHIRLEY STREET UNIT DEVELOPMENT

FOR INFORMATION

| Drawn: | Scale: | | Checked: | Date: |
|---|---|---|---|---|
| AB | 1:100 | | | 23/02/2023 |
| Checked: AE | Original Size: A3 | No. in set: 04 of 05 | | Revision: A |
| Job Number: 22381 | Drawing Number: 22381-CIV-SP-04 | | | |

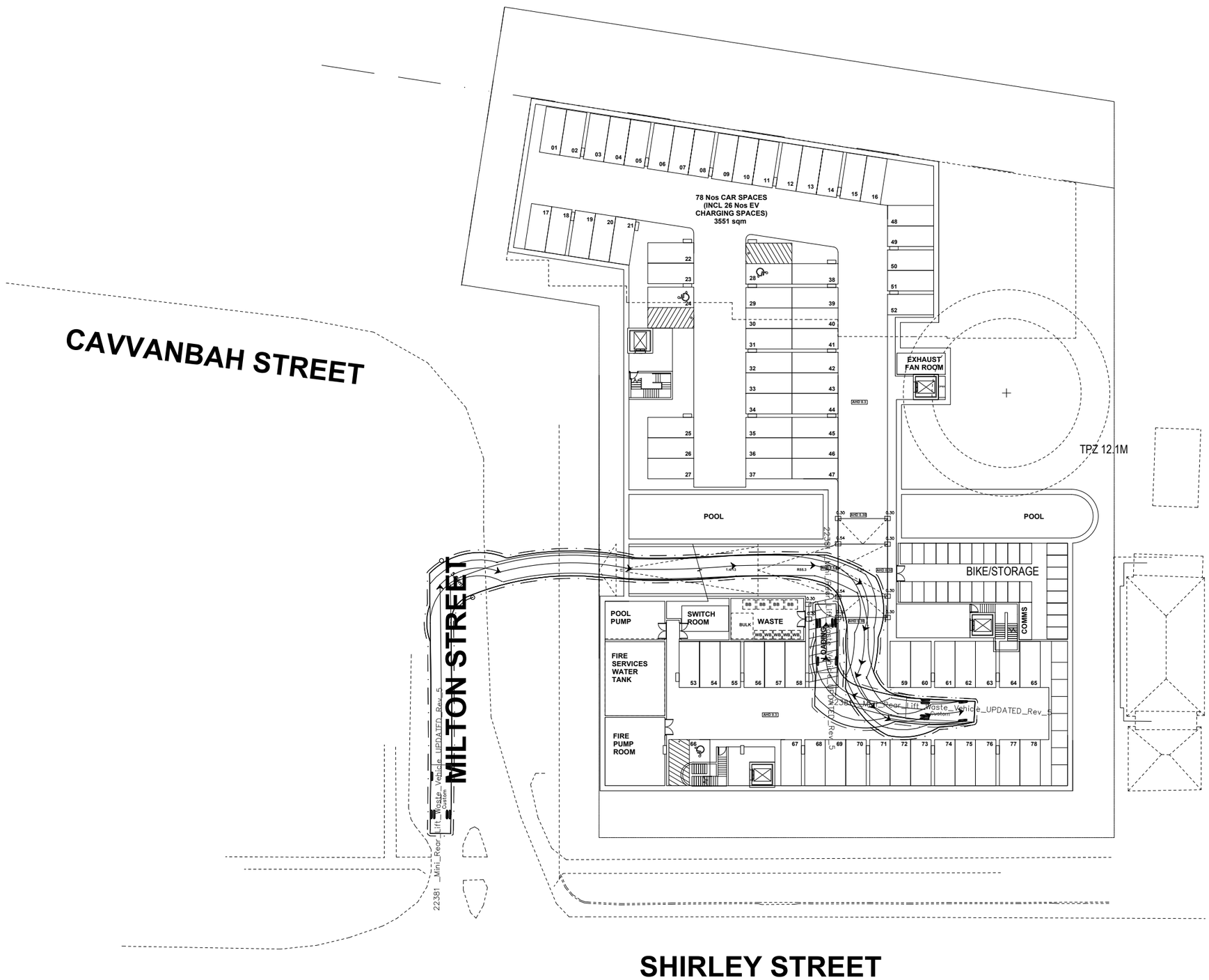


BYRON SHIRE COUNCIL
Development Application
APPROVED PLAN
DA No. 10.2022.371.1
Date: 16 October 2023

| REV | REVISION DESCRIPTION | BY | DATE |
|---|---|---|---|
| C | UPDATED VEHICLE DIMS | AB | 29/07/2022 |
| D | UPDATED VEHICLE LENGTH | AB | 16/08/2022 |
| E | UPDATED VEHICLE DIMS | AB | 23/02/2023 |

THIS DRAWING IS CONFIDENTIAL AND IS THE PROPERTY OF GREG ALDERSON AND ASSOCIATES. IT MUST NOT BE DISCLOSED TO A THIRD PARTY, REPRODUCED, COPIED, OR LENT WITHOUT THE WRITTEN CONSENT OF THE PROPRIETOR.

DO NOT SCALE DRAWINGS, USE FIGURED DIMENSIONS

REFER COVER SHEET FOR NOTES UNLESS NOTED OTHERWISE

G:\My Drive\JOBS\22\22381 - Vitale Property Group - 29 Shirley Street, Byron Bay\CIVIL\CAD\22381-CIV-SP-E.dwg

**GREG ALDERSON & ASSOCIATES**
ABN 58 594 160 789
43 Main Street CLUNES NSW 2480
Ph: 02 6629 1552
E: office@aldersonassociates.com.au
Web: aldersonassociates.com.au

Client: VITALE PROPERTY GROUP PTY LTD

Site address: 29 SHIRLEY STREET BYRON BAY NSW 2481

Title: WASTE VEHICLE ENTRY SWEPT PATH

Project: 29 SHIRLEY STREET UNIT DEVELOPMENT

FOR INFORMATION

| Drawn: | Scale: | | Checked: | Date: |
|---|---|---|---|---|
| AB | 1:500 | | | 23/02/2023 |
| Checked: AE | Original Size: A3 | No. in set: 03 of 03 | | Revision: E |
| Job Number: 22381 | Drawing Number: 22381-CIV-SP-03 | | | |

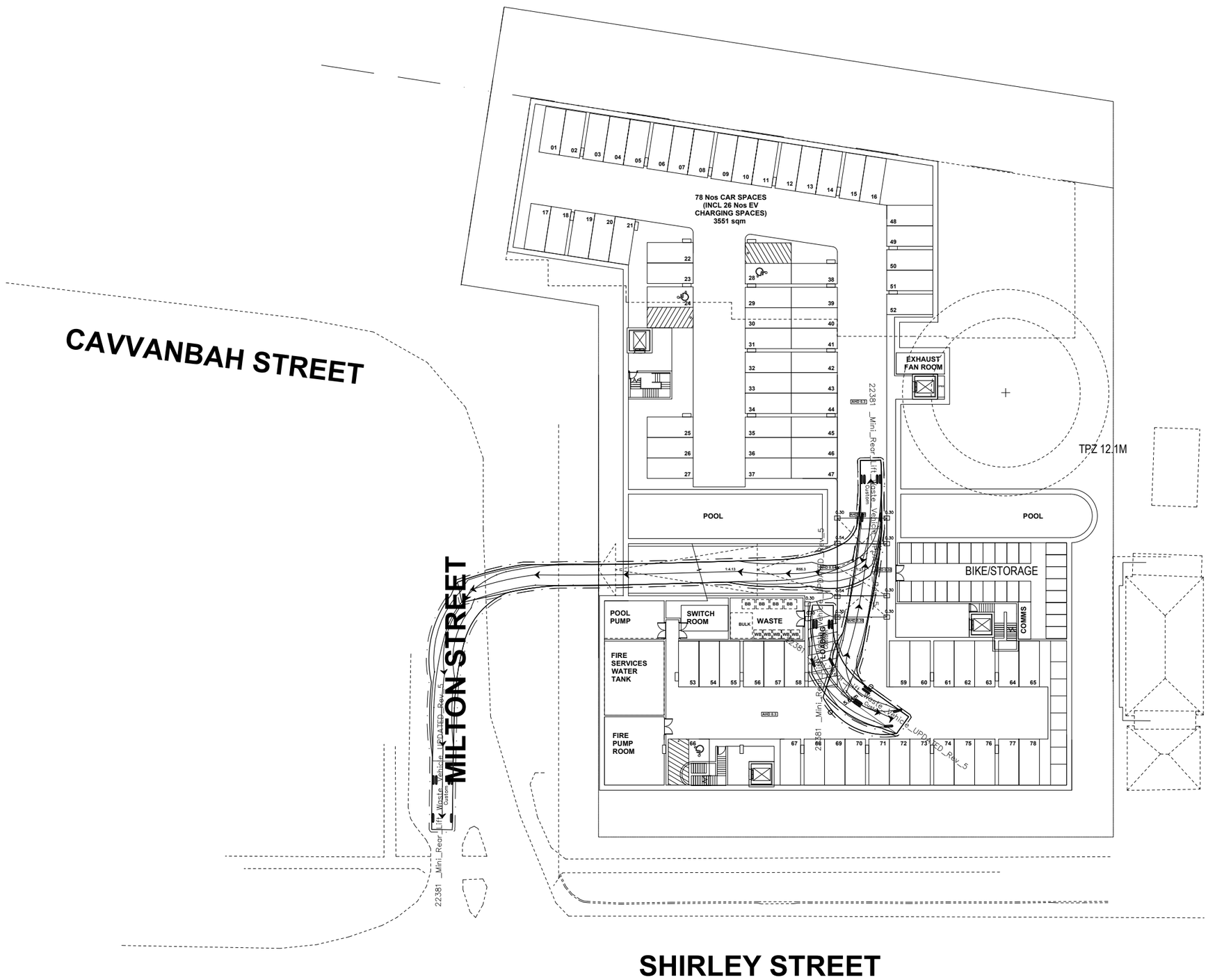


BYRON SHIRE COUNCIL
Development Application
APPROVED PLAN
DA No. 10.2022.371.1
Date: 16 October 2023

| REV | REVISION DESCRIPTION | BY | DATE |
|---|---|---|---|
| C | UPDATED VEHICLE DIMS | AB | 29/07/2022 |
| D | UPDATED VEHICLE LENGTH | AB | 16/08/2022 |
| E | UPDATED VEHICLE DIMS | AB | 23/02/2023 |

THIS DRAWING IS CONFIDENTIAL AND IS THE PROPERTY OF GREG ALDERSON AND ASSOCIATES. IT MUST NOT BE DISCLOSED TO A THIRD PARTY, REPRODUCED, COPIED, OR LENT WITHOUT THE WRITTEN CONSENT OF THE PROPRIETOR.

DO NOT SCALE DRAWINGS, USE FIGURED DIMENSIONS

REFER COVER SHEET FOR NOTES UNLESS NOTED OTHERWISE

Z:\JOBS\22\22381 - Vitale Property Group - 29 Shirley Street, Byron Bay\CIVIL\CAD\22381-CIV-SP-E.dwg

**GREG ALDERSON & ASSOCIATES**
ABN 58 594 160 789
43 Main Street CLUNES NSW 2480
Ph: 02 6629 1552
E: office@aldersonassociates.com.au
Web: aldersonassociates.com.au

Client: VITALE PROPERTY GROUP PTY LTD

Site address: 29 SHIRLEY STREET BYRON BAY NSW 2481

Title: WASTE VEHICLE EXIT SWEPT PATH

Project: 29 SHIRLEY STREET UNIT DEVELOPMENT

FOR INFORMATION

| Drawn: | Scale: | | Checked: | Date: |
|---|---|---|---|---|
| AB | 1:500 | | | 23/02/2023 |
| Checked: AE | Original Size: A3 | No. in set: 04 of 03 | | Revision: E |
| Job Number: 22381 | Drawing Number: 22381-CIV-SP-04 | | | |

BYRON SHIRE COUNCIL
Development Application
APPROVED PLAN
DA No. 10.2022.371.1
Date: 16 October 2023

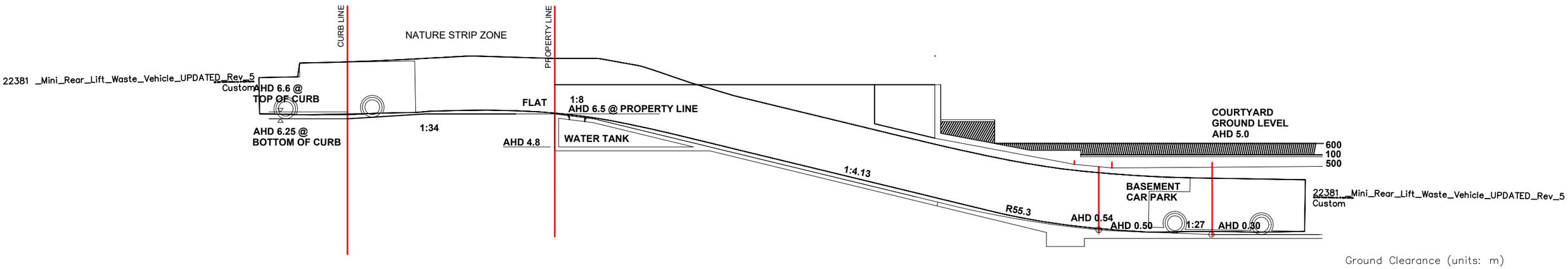


Ground Clearance (units: m)

| Part # | Front | Wheelbase | Rear |
|---|---|---|---|
| #1 | 0.28 | 0.20 | 0.20 |

Note: No clashes identified with vertical clearance template based on Custom Mini Rear Lift-Waste Vehicle

| REV | REVISION DESCRIPTION | BY | DATE |
|---|---|---|---|
| C | UPDATED VEHICLE DIMS | AB | 29/07/2022 |
| D | UPDATED VEHICLE LENGTH | AB | 16/08/2022 |
| E | UPDATED VEHICLE DIMS | AB | 23/02/2023 |

THIS DRAWING IS CONFIDENTIAL AND IS THE PROPERTY OF GREG ALDERSON AND ASSOCIATES. IT MUST NOT BE DISCLOSED TO A THIRD PARTY, REPRODUCED, COPIED, OR LENT WITHOUT THE WRITTEN CONSENT OF THE PROPRIETOR.

DO NOT SCALE DRAWINGS, USE FIGURED DIMENSIONS

REFER COVER SHEET FOR NOTES UNLESS NOTED OTHERWISE

G:\My Drive\JOBS\22\22381 - Vitale Property Group - 29 Shirley Street, Byron Bay\CIVIL\CAD\22381-CIV-SP-E.dwg

**GREG ALDERSON & ASSOCIATES**
ABN 58 594 160 789
43 Main Street CLUNES NSW 2480
Ph: 02 6629 1552
E: office@aldersonassociates.com.au
Web: aldersonassociates.com.au

Client: VITALE PROPERTY GROUP PTY LTD

Site address: 29 SHIRLEY STREET BYRON BAY NSW 2481

Title: WASTE VEHICLE VERTICAL SWEPT PATH

Project: 29 SHIRLEY STREET UNIT DEVELOPMENT

FOR INFORMATION

| Drawn: | Scale: | | Checked: | Date: |
|---|---|---|---|---|
| AB | 1:200 | | | 23/02/2023 |
| Checked: AE | Original Size: A3 | No. in set: 05 of 03 | | Revision: E |
| Job Number: 22381 | Drawing Number: 22381-CIV-SP-05 | | | |